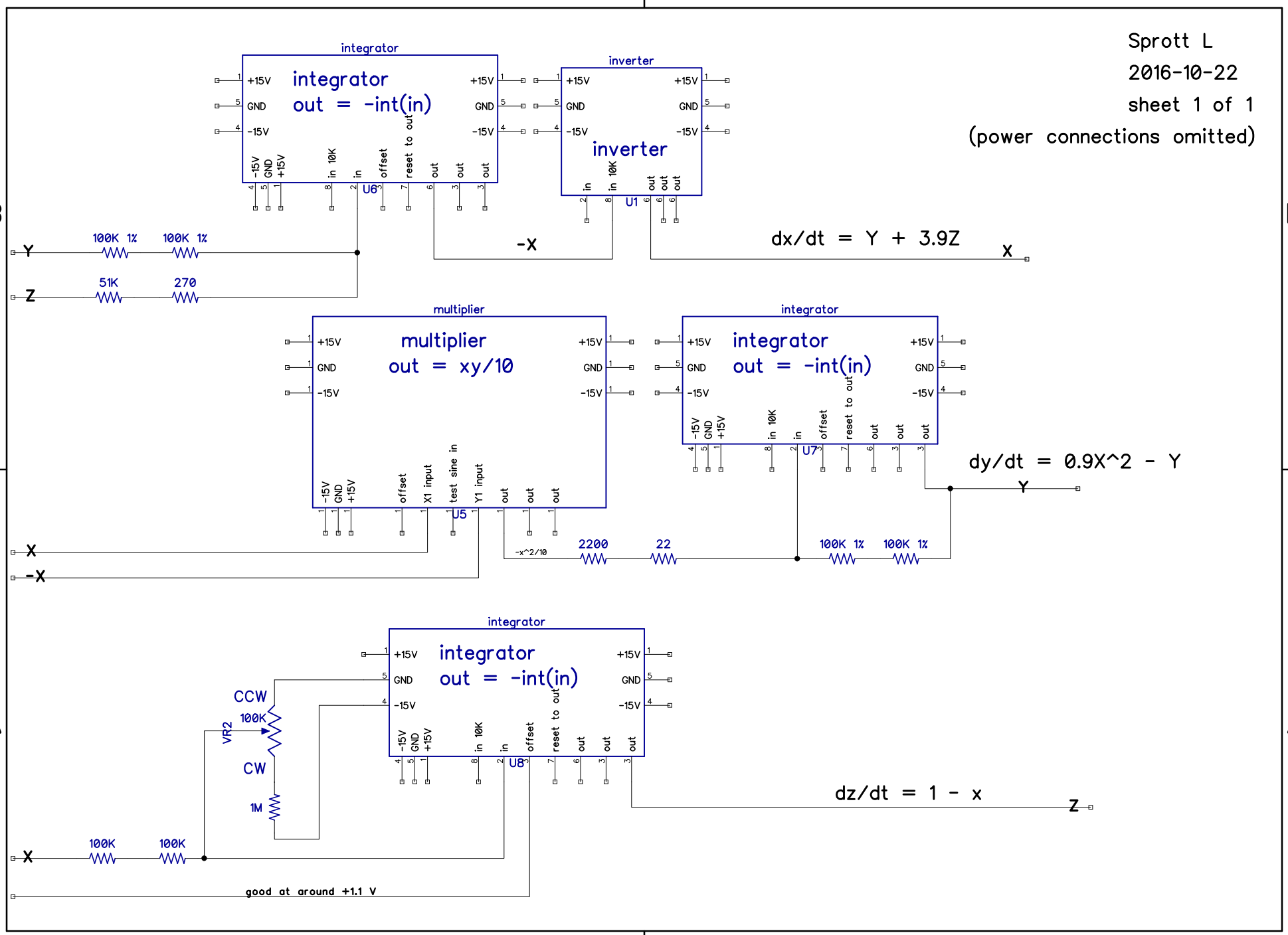
Sprott L
2016-10-22
sheet 1 of 1
(power connections omitted)
integrator
integrator
out = -int(in)
+15V
GND
-15V
-15V GND +15V
in 10K
in
offset
reset to out
out
out
out
U6
inverter
inverter
in
in 10K
out
out
out
U1
-x
dx/dt = Y + 3.9Z
x
Y
100K 1%
100K 1%
Z
51K
270
multiplier
multiplier
out = xy/10
offset
X1 input
test sine in
Y1 input
out
out
out
U5
-x^2/10
2200
22
integrator
integrator
out = -int(in)
U7
dy/dt = 0.9X^2 - Y
Y
100K 1%
100K 1%
X
-X
integrator
integrator
out = -int(in)
U8
CCW
100K
VR2
CW
1M
100K
100K
X
dz/dt = 1 - x
Z
good at around +1.1 V